EDR Series:

High Precision High Speed Gearboxes

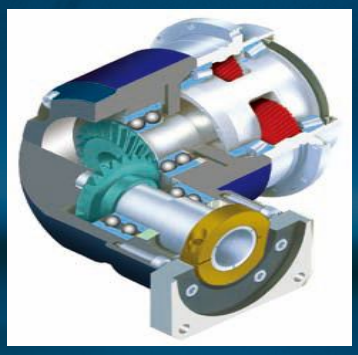

Ratio 3:1-100:1

Output Torque UP to 2000Nm

Backlash UP to 4arc min

Available Sizes 47-255

Model Key

MODEL	ED	EDR
SIZE	060	047\064\090\110\140 200\255
RATIO	32	L1: 03\04\05\06\08\10 L2: 09\12\15\16\18 20 \24\25\30\32\36\40 48 \64
BACKLASH	P2	Ultra Precision: P0 Precision: P1 Standard: P2
OUTPUT TYPE	Z2	Standard Plate: Z2 Customized: T
MOTOR TYPE	MOTOR	Motor manufacture and model

HOW TO ORDER
1. Select dimension and ratio
2. Select model
3. Select motor model and installation type

Performance Parameters

SIZE		STAGES	RATIO [1]	EDR047	EDR064	EDR090	EDR100	EDR140	EDR200	EDR255
Rated Output Torque T_{2N}	Nm	1	4	19	48	130	270	560	1,100	1,700
			5	22	60	160	330	650	1,200	2,000
			7	19	50	140	300	550	1,100	1,800
			10	14	40	100	230	450	900	1,500
			14	–	42	140	300	550	1,100	1,800
			20	–	40	100	230	450	900	1,500
		2	20	19	–			–	–	–
			25	22	60	160	330	650	1,200	2,000
			35	19	50	140	300	550	1,100	1,800
			40	19	48	130	270	560	1,100	1,700
			50	22	60	160	330	650	1,200	2,000
			70	19	50	140	300	550	1,100	1,800
			100	14	40	100	230	450	900	1,500
			140	–	–	140	300	550	1,100	1,800
			200	–	–	100	230	450	900	1 500
Emergency Stop Torque T_{2NOT} [2]	Nm	1,2	4~200	3x Rated Output Torque						
Rated Input Speed n_{1N}	rpm	1,2	4~200	5,000	5,000	4,000	4,000	3,000	3,000	2,000
Max Input Speed n_{1B}	rpm	1,2	4~200	10,000	10,000	8,000	8,000	6,000	6,000	4,000
Ultra Precision Backlash P0	arcmin	1	4~20	–	–	≤2	≤2	≤2	≤2	≤2
		2	25~200	–	–	≤4	≤4	≤4	≤4	≤4
Precision Backlash P1	arcmin	1	4~20	≤4	≤4	≤4	≤4	≤4	≤4	≤4
		2	25~200	≤7	≤7	≤7	≤7	≤7	≤7	≤7
Standard Backlash P2	arcmin	1	4~20	≤6	≤6	≤6	≤6	≤6	≤6	≤6
		2	25~200	≤9	≤9	≤9	≤9	≤9	≤9	≤9
Torsional Rigidity	Nm/arcmin	1,2	4~200	7	13	31	82	151	440	,006
Max Bending moment M_{2KB} [3]	Nm	1,2	4~200	42.5	125	235	430	1,300	3,064	,900
Permissible Axial Force F_{2B} [3]	N	1,2	4~200	1,080	2,110	2,310	4,800	6,200	5,450	0,600
Use Life	hr	1,2	4~200	30,000*						
Efficiency η	%	1	4~20	≥95%						
		2	25~200	≥92%						
Weight	kg	1	4~20	1.1	2.1	5.9	10.5	21.9	50.9	85.4
		2	25~200	1.4	1.9	4.5	9.8	20.1	45.4	85.9
Temperature	°C	1,2	4~200	10℃~+90℃						
Lubricating		1,2	4~200	Synthetic Lubricants (NYOGEL 792D)						
Protection class		1,2	4~200	IP65						
Installation Direction		1,2	4~200	Any Direction						
Noice (n_1=3000 rpm, w/o load)	dB(A)	1,2	4~200	≤61	≤63	≤65	≤68	≤70	≤72	≤74

Gearbox Moment of Inertia

SIZE		STAGES	RATIO [1]	EDR047	EDR064	EDR090	EDR100	EDR140	EDR200	EDR255
Moment of Inertia J_1	kg・cm²	1	4~10	0.09	0.35	2.25	6.84	23.4	68.9	135.4
			14	–	0.07	1.87	6.25	21.8	65.6	119.8
			20	–	0.07	1.87	6.25	21.8	65.6	119.8
		2	20	0.09	–	–	–	–	–	–
			25~100	0.09	0.09	0.35	2.25	6.84	23.4	68.9
			140~200	–	–	0.31	1.87	6.25	21.8	65.6

1. 减速比($i=N_{in}/N_{out}$)　2. 输出转数 100 rpm 时，作用于输出轴中心位置。　3.最大加速力矩 T_{2B}=60% of T_{2NOT}　＊连续运转，使用寿命为10,000hrs。

L1=Stage 1 Ratio i=4~20

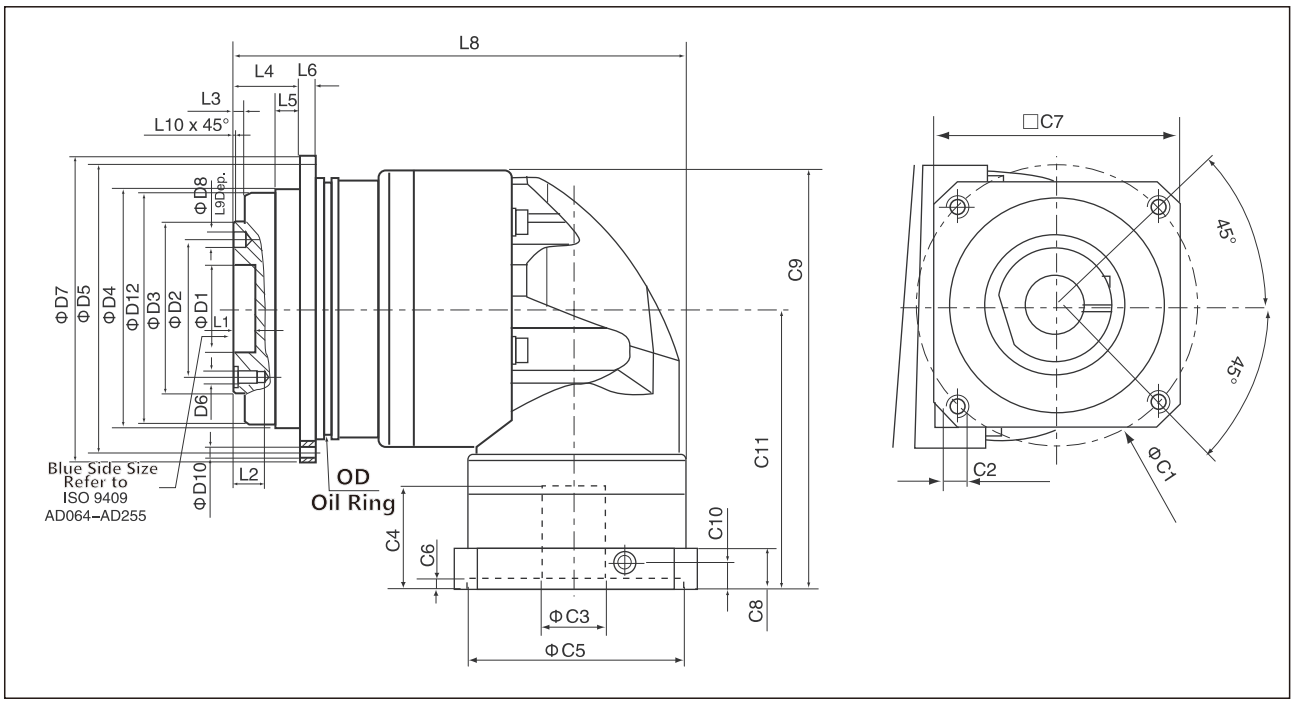

[Unit: mm]

SIZE	EDR047	EDR064	EDR090	EDR100	EDR140	EDR200	EDR255
D1 H7	12	20	31.5	40	50	80	100
D2	20	31.5	50	63	80	125	140
D3 h7	28	40	60	80	100	160	180
D4 h7	47	64	90	110	140	200	255
D5	67	79	109	135	168	233	280
D6	4×M3×0.5P	7×M5×0.8P	7×M6×1P	11×M6×1P	11×M8×1.25P	11×M10×1.5P	12×M16×2P
D7	72	86	118	145	179	247	300
D8 H7	3	5	6	6	8	10	12
D9	8×3.4	8×4.5	8×5.5	8×5.5	12×6.6	12×9	16×13.5
D10	46.2	63.2	89.2	109.2	139.2	199.2	254.2
L1	4	8	12	12	12	16	20
L2	6.5	8	13.5	13.5	17	22.5	30.5
L3	3	3	6	6	6	8	12
L4	19.5	19.5	30	29	38	50	66
L5	7	7	10	10	14.6	15	20
L6	4	4	7	8	10	12	18
L8	107.5	126	172.5	201	263.5	334.5	392
L9	4	6	7	7	7	10	10
L10	0.5	0.5	1	1	1	1	1
C1 [4]	46	70	100	130	165	215	235
C2 [4]	M4×0.7P	M5×0.8P	M6×1P	M8×1.25P	M10×1.5P	M12×1.75P	M12×1.75P
C3 [4]	≤11	≤14/≤16	≤19/≤24	≤32	≤38	≤48	≤55
C4 [4]	30	34	40	50	60	85	116
C5 [4] G6	30	50	80	110	130	180	200
C6 [4]	3.5	8	4	5	6	6	6
C7 [4]	48	60	90	115	142	190	220
C8 [4]	19.5	16	17	19.5	22.5	29	63
C9 [4]	104.25	116.5	159.5	199	245.5	316	398.5
C10 [4]	13.25	13.5	10.75	13	15	20.75	53.5
C11 [4]	74	81.5	107.5	134	164.5	213.5	268.5

4. C1~C10 use metric standard motor connecting plate size.

L2=Stage 2 Ratio i=25~200

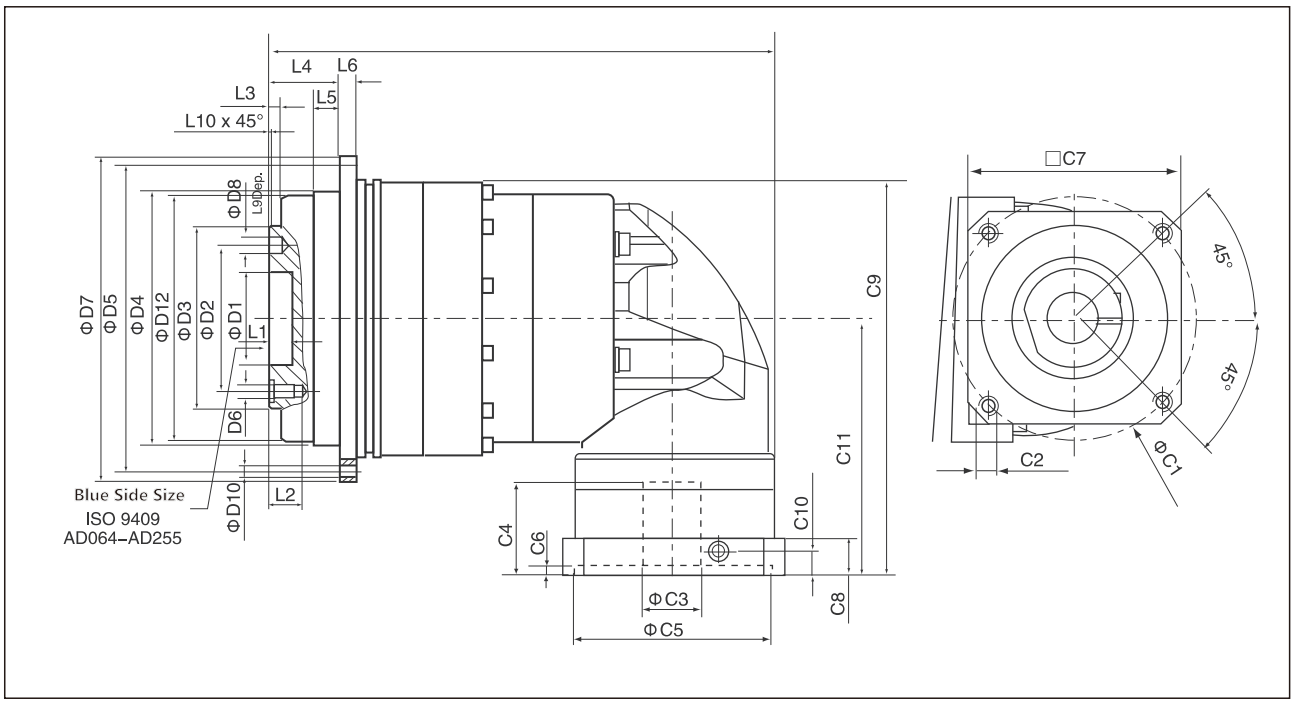

[Unit: mm]

SIZE	EDR047	EDR064	EDR090	EDR100	EDR140	EDR200	EDR255
D1 H7	12	20	31.5	40	50	80	100
D2	20	31.5	50	63	80	125	140
D3 h7	28	40	60	80	100	160	180
D4 h7	47	64	90	110	140	200	255
D5	67	79	109	135	168	233	280
D6	4×M3×0.5P	7×M5×0.8P	7×M6×1P	11×M6×1P	11×M8×1.25P	11×M10×1.5P	12×M16×2P
D7	72	86	118	145	179	247	300
D8 H7	3	5	6	6	8	10	12
D10	8×3.4	8×4.5	8×5.5	8×5.5	12×6.6	12×9	16×13.5
D12	46.2	63.2	89.2	109.2	139.2	199.2	254.2
L1	4	8	12	12	12	16	20
L2	6.5	8	13.5	13.5	17	22.5	30.5
L3	3	3	6	6	6	8	12
L4	19.5	19.5	30	29	38	50	66
L5	7	7	10	10	14.6	15	20
L6	4	4	7	8	10	12	18
L8	122	132.5	163	217.5	269.5	333.5	403
L9	4	6	7	7	7	10	10
L10	0.5	0.5	1	1	1	1	1
C1 [5]	46	46	70	100	130	165	200
C2 [5]	M4×0.7P	M4×0.7P	M4×0.7P	M6×1P	M8×1.25P	M10×1.5P	M12×1.75P
C3 [5]	≤11	≤11/≤12	≤14/≤/15.875≤16	≤19/≤24	≤32	≤38	≤48
C4 [5]	30	30	34	40	50	60	85
C5 [5] G6	30	30	50	80	110	130	180
C6 [5]	3.5	3.5	8	4	5	6	6
C7 [5]	48	48	60	90	115	142	190
C8 [5]	19.5	19.5	16	17	19.5	22.5	29
C9 [5]	103.25	108.25	128.5	166.5	209	269.5	340
C10 [5]	13.25	13.25	13.5	10.75	13	15	20.75
C11 [5]	74	74	81.5	107.5	134	164.5	213. 5

5. C1~C10 use metric standard motor connecting plate size.