EBR Series:

High Precision High Speed Gearboxes

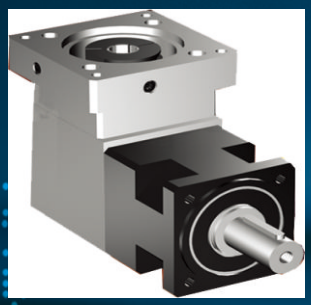

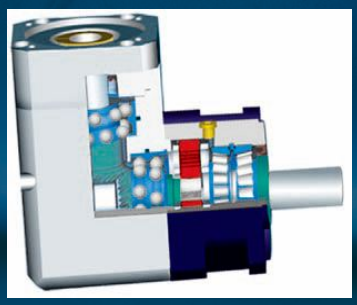

RATIO 3:1-10000:1

OUTPUT TORQUE UP to 16000 Nm

BACKLASH UP to 5arc min

AVAILABLE SIZES 70-400

MODEL KEY

SERIES	EB	EBR
SIZE	060	070\090\115\142 190\240\285\330\400
RATIO	32	L1: 03\04\05\06\08\10 L2: 09\12\15\16\18 20\24 \25\30\32\36\40 48\64 L3: 60\64\72\75\80\90 100 \120\144\150\160 180\200 \240\256\288 320\384\512
BACKLASH	P2	Ultra Precision: P0 Precision: P1 Standard: P2
OUTPUT TYPE	Z2	Axis: Z1 Single Key: Z2 Spline Key: Z3 Light Hole: K1 Single Hole: K2 Spline Hole: K3 Customized: T
MOTOR MODEL	MOTOR	Motor manufacture and model

How to Order
1. Choose dimensions and ratio
2. Select model
3. Choose motor model and installation type

EBR Performance Parameters

Specification		Stage	Ratio[1]	070	090	115	142	190	240	285	330	400
Rated Output Torque T_{2N}	Nm	L1	3:1	22	50	125	400	1,050	1,830	3,175	5,043	7,500
			4:1	45	125	260	800	1,780	3,700	6,400	10,000	17,000
			5:1	41	110	230	700	1,600	3,100	5,500	8,800	16,000
			6:1	26	65	130	550	1,000	2,100	4,500	7,500	13,000
			8:1	18	55	120	450	850	1,700	3,200	5,000	7,500
			10:1	15	32	70	210	360	920	1,600		
		L2	9:1	22	50	125	400	1,050	1,830	3,175	5,043	7,500
			12:1	45	125	260	800	1,780	3,700	6,400	10,000	17,000
			15:1	41	110	230	700	1,600	3,100	5,500	8,800	16,000
			16:1	45	120	260	800	1,780	3,700	6,400	10,000	17,000
			20:1	45	120	260	800	1,780	3,700	6,400	10,000	17,000
			25:1	41	110	230	700	1,600	3,100	5,500	8,800	16,000
			30:1	26	65	130	500	1,600	3,100	5,500	8,800	16,000
			32:1	45	125	260	800	1,780	3,700	6,400	10,000	17,000
			36:1	26	65	130	550	1,000	2,100	4,500	7,500	13,000
			40:1	41	110	230	700	1,600	3,100	5,500	8,800	16,000
			48:1	26	65	130	550	1,000	2,100	4,500	7,500	13,000
			50:1	25	60	120	500					
			64:1	18	55	120	450	850	1,700	3,200	5,000	7,500
		L3	48:1	45	125	260	800	1,780	3,700	6,400	10,000	17,000
			60:1	45	125	260	800	1,780	3,700	6,400	10,000	17,000
			64:1	45	125	260	800	1,780	3,700	6,400	10,000	17,000
			75:1	41	110	230	700	1,600	3,100	5,500	8,800	16,000
			80:1	45	125	260	800	1,780	3,700	6,400	10,000	17,000
			90:1	41	65	230	700	1,600	3,100	5,500	8,800	16,000
			100:1	45	125	260	800	1,780	3,700	6,400	10,000	17,000
			120:1	41	120	260	800	1,780	3,700	6,400	10,000	17,000
			125:1	41	110	230	700	1,600	3,100	5,500	8,800	16,000
			128:1	45	125	260	800	1,780	3,700	6,400	10,000	17,000
			150:1	41	110	230	700	1,600	3,100	5,500	8,800	16,000
			160:1	45	125	260	800	1,780	3,700	6,400	10,000	17,000
			180:1	41	110	230	700	1,600	3,100	6,400	10,000	16,000
			200:1	41	110	230	700	1,600	3,100	5,500	8,800	17,000
			240:1	41	110	230	700	1,600	3,100	5,500	8,800	16,000
			256:1	45	125	260	800	1,780	3,700	6,400	10,000	17,000
			320:1	41	110	230	700	1,600	3,100	5,500	8,800	16,000
			384:1	26	65	130	550	1,000	2,100	4,500	7,500	13,000
			512:1	18	55	120	450	850	1,700	3,200	5,000	7,500
		L4	500:1	45	125	260	800	1,780	3,700	6,400	10,000	17,000
			600:1	45	125	260	800	1,780	3,700	6,400	10,000	17,000
			720:1	45	125	260	800	1,780	3,700	6,400	10,000	17,000
			750:1	41	110	230	700	1,600	3,100	5,500	8,800	16,000
			800:1	45	125	260	800	1,780	3,700	6,400	10,000	17,000
			900:1	41	110	230	700	1,600	3,100	5,500	8,800	16,000
			1,000:1	41	110	230	700	1,600	3,100	5,500	8,800	16,000
			1,200:1	41	110	230	700	1,600	3,100	5,500	8,800	17,000
			1,536:1	45	125	260	800	1,780	3,700	6,400	10,000	17,000
			1,600:1	41	110	230	700	1,600	3,100	5,500	8,800	16,000
			1,920:1	41	110	230	700	1,600	3,100	5,500	8,800	16,000
			2,048:1	45	125	260	800	1,780	3,700	6,400	10,000	17,000
			2,560:1	41	110	230	700	1,600	3,100	5,500	8,800	16,000
			3,072:1	26	65	130	550	1,000	2,100	4,500	7,500	13,000
			4,096:1	18	55	120	450	850	1,700	3,200	5,000	7,500

EBR Performance Parameters

Specification				Stage/Ratio	070	090	115	142	190	240	285	330	400
Max Torque			N.m		1.5 times T2N					1.5x Rated Torque			
Failure Stop Torque			N.m		2 times T2N					2x Rated Torque			
Max Radial Force			N		265	450	1,240	3,700	6,500	10,500	15,000	17,000	26,500
Max Axial Force			N		230	430	1,000	3,500	5,000	10,000	12,000	15,000	20,000
Torsional Rigidity			Nm arcmin		1.8	4.8	11	35	70	125	215	350	550
Max Input Speed			rpm		8,000	6,000	6,000	4,500	4,000	3,500	3,000	2,500	2,500
Rated Input Speed			rpm		4,000	3,500	3,500	3,000	2,500	2,000	2,000	1,500	1,500
Noice	EB		dB(A)		<58	<60	<65	<70	<72	<75	<78	<80	<80
	EBR				<61	<63	<68	<75	<78	<80	<80	<82	<82
Use Life			h		20,000					10,000			
Efficiency			η		Stage 1⩾96%			Stage 2⩾94%		Stage 3⩾90%			
Backlash	EB	P0	arcmin	L1	<3	<3	<3	<3	<3	<3			
				L2	<5	<5	<5	<5	<5	<5			
				L3	<7	<7	<7	<7	<7	<7			
		P1	arcmin	L1	<5	<5	<5	<5	<5	<5	<8	<8	<8
				L2	<7	<7	<7	<7	<7	<7	<10	<10	<10
				L3	<9	<9	<9	<9	<9	<9	<15	<15	<15
		P2	arcmin	L1	<7	<7	<7	<7	<7	<7	<10	<10	<10
				L2	<9	<9	<9	<9	<9	<9	<12	<12	<12
				L3	<11	<11	<11	<11	<11	<11	<18	<18	<18
	EBR	P0	arcmin	L1	<5	<5	<5	<5	<5	<5			
				L2	<7	<7	<7	<7	<7	<7			
				L3	<9	<9	<9	<9	<9	<9			
		P1	arcmin	L1	<7	<7	<7	<7	<7	<7	<12	<12	<12
				L2	<9	<9	<9	<9	<9	<9	<15	<15	<15
				L3	<11	<11	<11	<11	<11	<11	<18	<18	<18
		P2	arcmin	L1	<10	<10	<10	<10	<10	<10	<14	<14	<14
				L2	<12	<12	<12	<12	<12	<12	<18	<18	<18
				L3	<14	<14	<14	<14	<14	<14	<20	<20	<20
Moment of inertia			kgcm²	L1 3:1	0.135	0.77	2.63	12.14	28.98				
				L1 4:1	0.093	0.52	1.79	7.78	23.67	32.85	40.2	75.1	251.6
				L1 5:1	0.078	0.45	1.53	6.07	23.29	28.71	39.9	73.4	243.0
				L1 6:1	0.075	0.42	1.40	5.24	22.75	27.03	36.6	70.9	232.4
				L1 8:1	0.065	0.39	1.30	4.63	20.51	25.69	34.5	62.5	205.8
				L1 10:1	0.063	0.39	1.28	4.60	20.51				
				L2 15:1	0.039	0.72	2.40	7.47	16.50				
				L2 20:1	0.049	0.35	1.60	6.95	9.35	14.35	18.80	24.00	55.30
				L2 25:1	0.039	0.25	1.40	6.65	9.00	12.44	18.30	23.20	52.10
				L2 32:1	0.038	0.18	1.40	5.81	8.75	12.44	16.75	23.20	52.10
				L2 40:1	0.027	0.18	1.30	5.81	8.75	11.35	16.60	23.20	50.09
				L2 64:1	0.027	0.16	1.30	5.28	8.10	11.35	16.60	23.20	50.09
				L3 60:1	0.039	0.28	1.57	6.85	6.92				
				L3 80:1	0.039	0.25	1.38	6.10	6.92	14.27	17.73	24.73	40.75
				L3 100:1	0.016	0.25	1.35	5.70	6.55	10.31	14.85	19.75	38.60
				L3 160:1	0.016	0.18	1.35	5.55	6.55	9.42	14.50	19.70	36.50
				L3 200:1	0.016	0.18	1.30	5.32	6.55	8.20	13.75	18.50	32.85
				L3 256:1	0.016	0.16	1.30	5.21	6.30	8.20	13.75	18.50	32.85
				L3 320:1	0.016	0.16	1.25	5.15	6.30	8.10	13.25	18.50	30.71
				L3 512:1	0.016	0.16	1.20	5.15	6.30	7.95	10.80	15.45	28.85
Weight	EB		kg	L1	0.93	2.35	6.15	19.00	31.00	70	113	145	250
				L2	1.15	2.70	8.00	24.00	42.00	88	136	190	340
				L3	1.35	3.20	10.00	29.00	50.00	96	140	215	360
				L4						99	148	219	375
	EBR			L1	4.0	7.5	13.5	26.5	50	95	143	185	300
				L2	4.7	8.7	16	29.6	61	103	166	230	390
				L3	5.5	9.5	18.6	32.6	70	121	170	255	410
				L4						124	178	259	425

(1) Note: the permissible radial force and axial force at the center of output axis when output speed at 100 rpm.
(2) the weight of the gearbox may very with different motor selection and material used.
(3) Moment of inertia is in relation with the transmission system, such as the reduction ratio, gear internal structure, and input journal. Cartesian inertia may change.

EB70-EB190-OP2 Motor Connection and Dimentions

Real Axis	Z1 Axis		Z2 Single Key Axis		Z3 Spline Key Axis		Customized Axis Zt

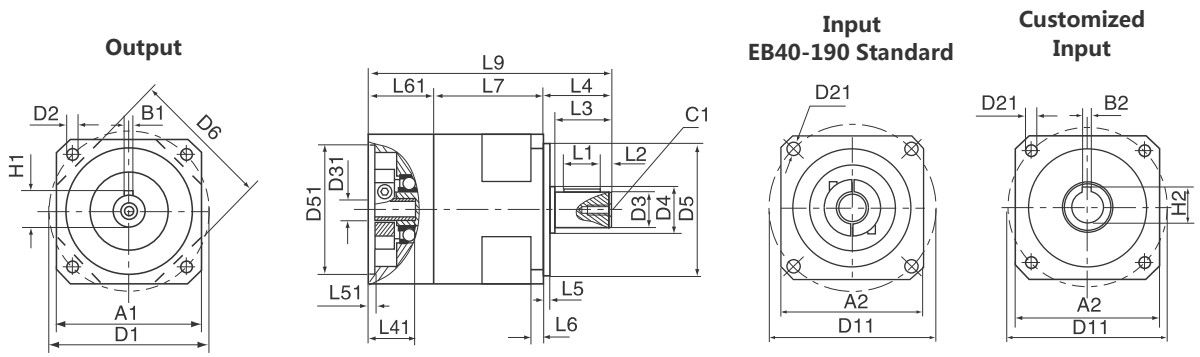

Hole Axis	K1 Light Hole Customized Output Type		K2 Single Hole		K3 Spline Hole		Customized Hole Kt

[Unit: mm]

Size			EB070 Stage 1\2\3			EB090 Stage 1\2\3			EB115 Stage 1\2\3			EB142 Stage 1\2\3			EB190 Stage 1\2\3\4			
Gear Output Terminal Size	A1	□	65			85			115			142			190			
	B1		5			6			8			12			14			
	C1		M5X12			M6X15			M10X22			M12X25			M20X42			
	H1		16			22.5			28			43			53.5			
	D1	Φ	70			100			130			165			215			
	D2	4×	Φ5.5			Φ6.5			Φ8.5			Φ11			Φ13.5			
	D3	Φ h6	14			20			25			40			50			
	D4	Φ	17			25			35			60			**70**			
	D5	Φ h7	50			70			95			130			160			
	D6	□	64			87			115			140			190			
	L1		25			25			40			65			70			
	L2		4			4			5			5			5			
	L3		30			36			50			80			80			
	L4		35			40			55			87			90/104			
	L5		3			3			4			5			6/20			
	L6		8			10			14			20			20			
	L7 (2)		40	60	80	55	79	103	74	104	134.5	95	134.5	173.5	137/123	176.5/162.5	216/202	308.5/294.5
	L9 (1)		115	135	155	148	172	196	**209.5**	**239.5**	**270**	**304.5**	**344**	**383**	**354.5**	**394**		

(1) The parameters are related to the motor model selected. Sizes may very.
(2) The parameters are related to the internal structure of the gearbox. Sizes may very.

EBR70-EBR400-OP2 Input Axis Dimensions

Real Axis	Z1 Axis		Z2 Single Key Axis		Z3 Spline Key Axis		Customized Axis Zt

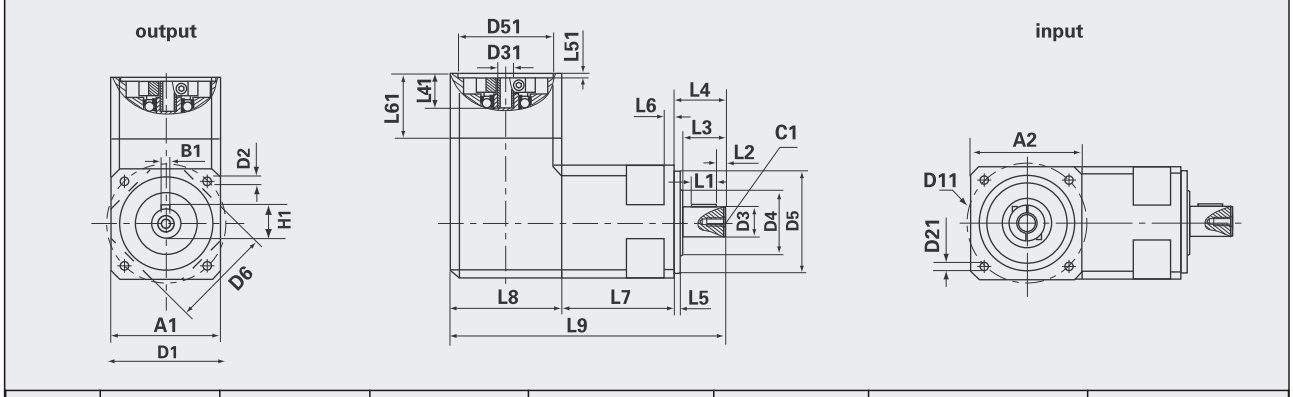

Hole Axis	K1 Light Hole		K2 Single Key Hole		K3 Spline Key Hole		Customized Key Hole Kt
Customized Output Type							

[Unit: mm]

	SIZE		EB070 Stage 1\2\3			EB090 Stage 1\2\3			EB115 Stage 1\2\3			EB142 Stage 1\2\3			EB190 Stage 1\2\3\4			
Gear Output Terminal Size	A1	□	65			85			115			142			190			
	B1		5			6			8			12			14			
	C1		M5X12			M6X15			M10X22			M12X25			M20X42			
	H1		16			22.5			28			43			53.5			
	D1	Φ	70			100			130			165			215			
	D2	4×	Φ5.5			Φ6.5			Φ8.5			Φ11			Φ13.5			
	D3	Φ h6	14			20			25			40			50			
	D4	Φ	17			25			35			60			72			
	D5	Φ h7	50			70			95			130			160			
	D6	□	64			87			115			140			190			
	L1		25			25			40			60			70			
	L2		4			4			5			5			5			
	L3		30			36			50			80			80			
	L4		35			40			55			87			90/104			
	L5		3			3			4			5			6/20			
	L6		8			10			14			20			20			
	L7 (2)		40	60	80	55	79	103	74	104	134.5	95	134.5	173.5	137/123	176.5/162.5	216/202	308.5/294.5
	L9 (1)		115	135	155	148	172	196	209.5	239.5	270	304:5	344	383	354.5	394		
Motor Input Terminal Size (1)	A2		65			85			115			142			190		142	
	B2		3			5			6			10			12		10	
	C2		M4X10			M5X12			M6X16			M12X25			M12X25		M12X25	
	H2		11.2			18			22.5			38			43		38	
	D11	Φ	70			100			130			165			215		165	
	D21	4×	M5X12			M6X15			M8X18			M10X22			M12X25		M10X22	
	D31		10			16			20			35			40		35	
	D41		17			25			35			55			55		55	
	D51		50			70			95			130			160		130	
	L11		15			20			30			45			50		45	
	L21		3			3			5			7			6.5		7	
	L31		21			26			40			58			63		58	
	L41		25			30			45			65			70		65	
	L51		3			3			4			5			5			
	L61		23.8			28.8			35.5			57.5			57.5		57.5	

(1) The parameters are related to the motor model selected. Sizes may very.
(2) The parameters are related to the internal structure of the gearbox. Sizes may very.

EBR70-EBR400-OP2 Axis Connection Type and Dimensions

Real Axis	Z1 Axis		Z2 Single Key Axis		Z3 Spline Key Axis		Customized Axis Zt

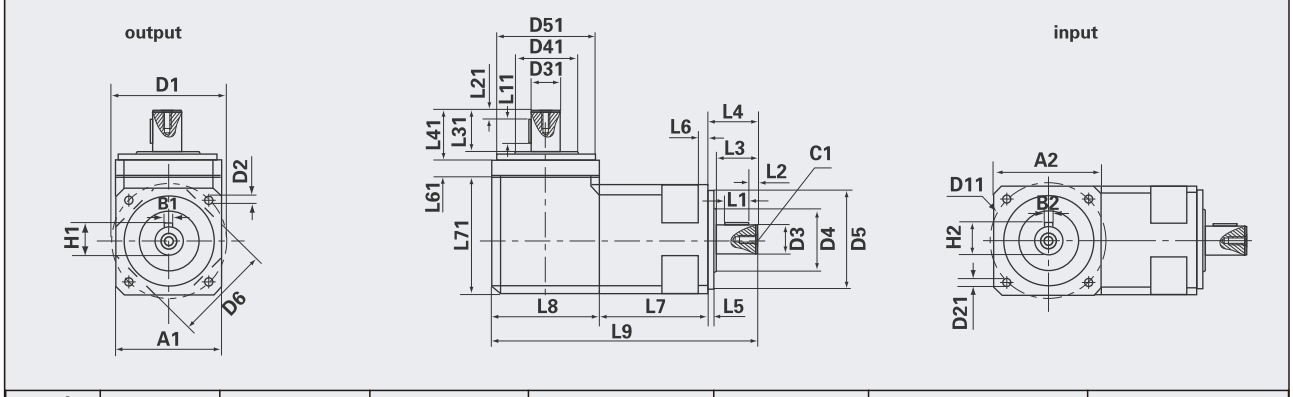

Hole Axis	K1 Light Hole		K2 Single Key Hole		K3 Spline Key Hole		Customized Key Hole Kt

Customized Output Type

[Unit: mm]

SIZE			EB070 L 1\2\3	EB090 L 1\2\3	EB115 L 1\2\3	EB142 L 1\2\3	EB190 L 1\2\3	EB240 L 1\2\3	EB285 L 1\2\3	EB330 L 1\2\3\4	EB400 L 1\2\3\4
Gear Output Terminal Size	A1	□	65	85	115	142	190	240	285	330	400
	B1		5	6	8	12	14	18	20	22	25
	C1		M5X12	M6X15	M10X22	M12X25	M20X42	M24X50	M24X50	M24X50	M24X50
	H1		16	22.5	28	43	53.5	69	74.5	85	95
	D1	Φ	70	100	130	165	215	265	315	370	425
	D2	4×	Φ5.5	Φ6.5	Φ8.5	Φ11	Φ13.5	Φ18	Φ18	Φ22	Φ22
	D3	Φ h6	14	20	25	40	50	65	70	80	90
	D4	Φ	19	30	35	60	70	75	85	90	100
	D5	Φ h7	50	70	95	130	160	225	250	290	350
	D6	□	64	87	115	140	190				
	L1		25	25	40	65	70	85	95	100	125
	L2		4	4	5	5	5	7.5	7.5	10	5
	L3		30	36	50	80	80	100	110	120	135
	L4		35	40	55	87	90/104	125	135	150	165
	L5		3	3	4	5	6/20	20	20	25	25
	L6		8	10	14	20	20	25	25	25	35
	L8		75	103.6	125.5	151.2	205	205+	205+	205+	205+
	L7 (2)		40 60 80	55 79 103	74 104 134.5	95 134.5 173.5	137/123 165/182.5	216/202 300.5/294.5	162.5 217 315 355	192 254 347.5 402	206 272.5 375.5 437.5
	L9 (1)		115 135 155	148 172 196	254.5 284.5 315	333.2 372.7 411.7	432 471.5 511	601.5			265 338 447.5 512.5

Motor input ternimal sizes: A2/B2/H2/D11/D21/D31/D51/L41/L51/L61
Maybe be customized to fit the motor model.

(1) The parameters are related to the motor model selected. Sizes may very.
(2) The parameters are related to the internal structure of the gearbox. Sizes may very.

EBR70-EBR400-OP2 Input Axis Dimensions

Real Axis	Z1 Axis		Z2 Single Key Axis		Z3 Spline Key Axis		Customized Axis Zt

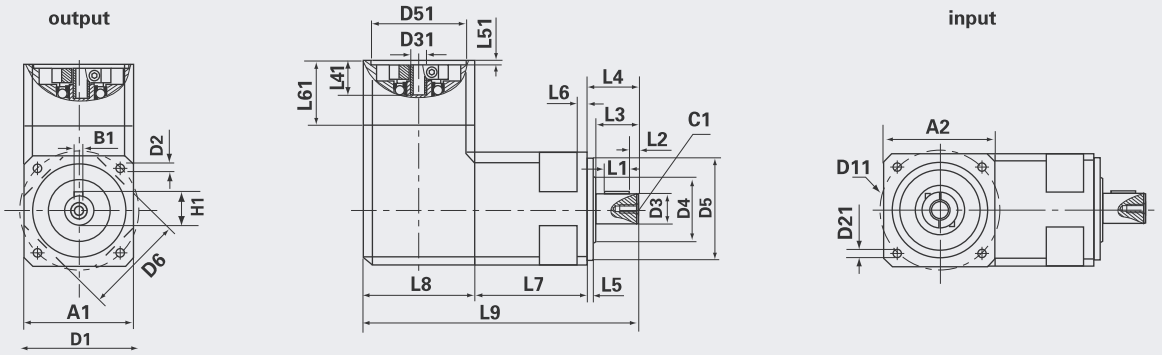

Hole Axis	K1 Light Hole		K2 Single Key Hole		K3 Spline Key Hole		Customized Key Hole Kt

Customized Output Type

[Unit: mm]

SIZE			EB070 L 1\2\3	EB090 L 1\2\3	EB115 L 1\2\3	EB142 L 1\2\3	EB190 L 1\2\3	EB240 L 1\2\3	EB285 L 1\2\3	EB330 L 1\2\3\4	EB400 L 1\2\3\4
Gear Output Terminal Size	A1	□	70	90	115	142	190	240	285	330	400
	B1		5	6	8	12	14	18	20	22	25
	C1		M5X12	M6X15	M10X22	M12X25	M20X42	M24X50	M24X50	M24X50	M24X50
	H1		16	22.5	28	43	53.5	69	74.5	85	95
	D1	Φ	70	100	130	165	215	265	315	370	425
	D2	4X	Φ5.5	Φ6.5	Φ8.5	Φ11	Φ13.5	Φ18	Φ18	Φ22	Φ22
	D3	Φh6	14	20	25	40	50	65	70	80	90
	D4	Φ	19	30	35	60	70	75	85	90	100
	D5	Φh7	50	70	95	130	160	225	250	290	350
	D6	□	64	87	115	140	190	–	–	–	–
	L1		25	25	40	65	70	90	100	110	125
	L2		4	4	5	5	5	5	5	5	5
	L3		30	36	50	80	80	100	110	120	135
	L4		35	40	55	87	90/104	125	135	150	165
	L5		3	3	4	5	6/20	20	20	25	25
	L6		8	10	14	20	20	25	25	25	35
	L8		75	103.6	125.5	151.2	205	205+	205+	205+	205+
	L7 (2)		40 60 80	55 79 103	74 104 134.5	95 134.5 173.5	137/123 176.5/162.5 216/202	308.5/294.5 162.5 217 315 355	192 254 347.5 402	206 272.5 375.5 437.5	265 338 447.5 512.5
	L9 (1)		115 135 155	148 172 196	254.5 284.5 315	333.2 372.7 411.7	432 471.5 511 601.5				
Motor Output Terminal Size (1)	A2		70	90	115	142	190 142	240 190	285 240	330 285 (240)	400 330 (285)
	B2		3	5	6	10	12 10	14 12	18 14	20 18 14	22 20 18
	H2		11.2	18	22.5	38	43 38	53.5 43	64 53.5	74.5 64 (53.5)	85 74.5 (64)
	D11	Φ	70	100	130	165	215 165	265 215	315 265	370 315 (265)	425 370 (315)
	D21	4X	M5X12	M6X15	M8X18	M10X22	M12X25 M10X22	M16X35 M12X25	M16X35 M16X35	M16X35 M16X35	M16X35 M16X35
	D31		10	16	20	35	40 35	50 40	60 50	70 60 (50)	80 70 (60)
	D41		17	25	35	55	55 55	60 55	75 60	85 75 (60)	100 85 (75)
	D51		50	70	95	130	160 130	225 160	250 225	290 250 (225)	350 290 (250)
	L11		15	20	30	45	50 45	60 50	70 60	80 70 (60)	90 80 (70)
	L21		3	3	5	7	6.5 7	6.5 6.5	5 6.5	5 5 (6.5)	7.5 5 (5)
	L31		21	26	40	58	63 58	73 63	80 73	90 80 (73)	105 90 (80)
	L41		25	30	45	65	70 65	83 70	90 83	100 90 (83)	117 100 (90)
	L51		3	3	4	5	5	8 5	8 8	8 8	10 8
	L61		23.8	28.8	38.5	46.5	57 46.5	85 57	111 85	125 111 (85)	130.5 125 (111)
	L71		76	103.6	125.5	151.2	213	213+	213+	213+	213+

EBR□K1 Light Hole (with tension set)

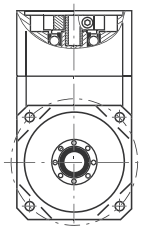

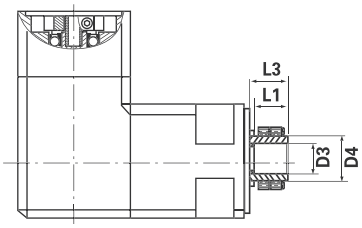

SIZE		EBR190K1	EBR240K1	EBR280K1	EBR330K1	EBR440K1
D3	ΦH7	50	55	65	70	80
D4	Φ	70	75	85	90	100
L1	mm	60	80	90	90	100
L3	mm	70	100	100	100	120

EBR□K2 Single Key Hole

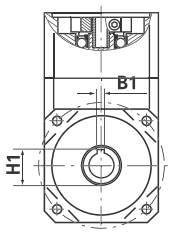

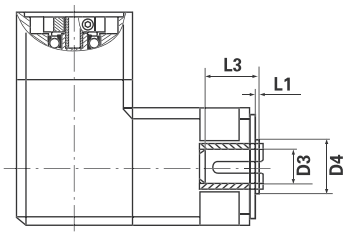

SIZE		EBR70K2	EBR90K2	EBR115K2	EBR142K2	EBR190K2	EBR240K2	EBR285K2	EBR330K2	EBR400K2
B1	mm	3	5	6	10	14	14	18	20	22
H1	mm	11.4	17	22.8	38.3	53.8	58.8	69.3	74.8	85
D3	ΦH7	10	15	20	35	50	55	65	70	80
D4	Φ	19	30	40	55	70	75	85	90	100
L1	mm	2	2	2	3	3	5	5	5	5
L3	mm	20	30	38	60	80	80	80	100	130

EBR □ K3 Spline Key Hole

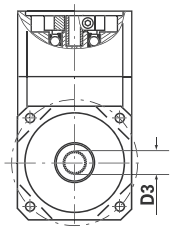

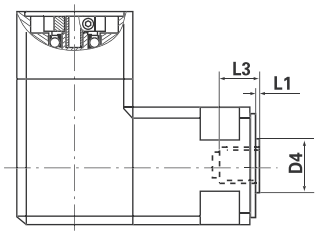

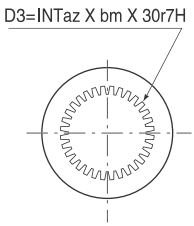

SIZE		EBR190K3	EBR240K3	EBR280K3	EBR330K3	EBR440K3
D3		INT20zX2mX30rX7H	INT25zX2mX30rX7H	INT20zX3mX30rX7H	INT25zX3mX30rX7H	INT20zX4mX30rX7H
D4	Φ	70	75	85	90	100
L1	mm	3	5	5	5	5
L3	mm	60	60	65	70	80

Note: Other sizes are same with EB Series standard sizes.

EBR-OP3 Fixed Installation Dimensions

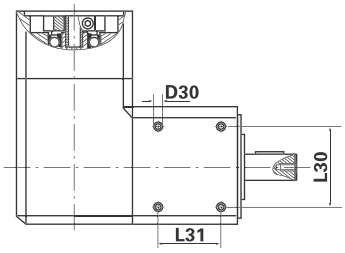

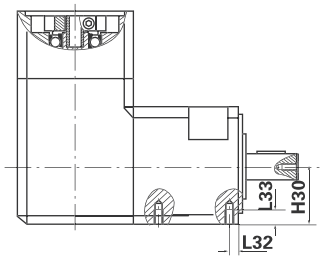

SIZE		EBR70		EBR90		EBR115		EBR140		EBR190	
		1	≥2	1	≥2	1	≥2	1	≥2	1	≥2
D30	Φ	M6		M8		M8		M8		M10	
H30	mm	35		45		57.5		71		95	
L30	mm	52		60		78		108		132	
L31	mm	35	51.5	40	63.5	56	90	79	120	80	128
L32	mm	6		8		8		10		10	
L33	mm	10		15		16		16		20	

EBR-OP4 Foot Installation Dimensions

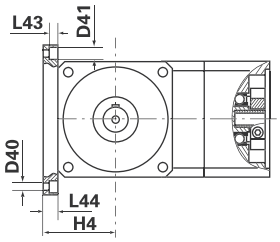

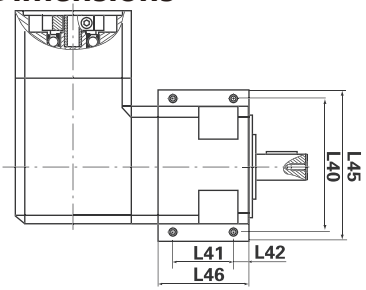

SIZE		EBR70		EBR90		EBR115		EBR142		EBR190		EBR240		EBR280		EBR330		EBR190	
		1	≥2	1	≥2	1	≥2	1	≥2	1	≥2	1	≥2	1	≥2	1	≥2	1	≥2
D40	Φ	6.6		9		9		9		11		13		13		18		18	
D41	Φ	11		15		15		15		18		20		20		26		26	
H4	mm	47		60		72.5		86		113		150		170		200		240	
L40	mm	84		110		135		165		216		265		310		360		430	
L41	mm	46.5	70	49	77.5	57.5	91.5	82	123	97.5	145	130	180	150	200	180	230	200	260
L42	mm	8		10		10		10		12		30		35		40		40	
L43	mm	6.8		10.5		10.5		10.5		11		13		13		17.5		17.5	
L44	mm	12		15		15		15		18		30		27.5		35		40	
L45	mm	100		130		155		185		240		300		350		420		480	
L46	mm	62.5	86	69	97.5	77.5	111.5	102	143	121.5	169	180	240	220	270	250	310	280	360

Note: Other sizes are same with EB Series standard sizes.
If the customer has different requirement for the center height, footing is not provided.
Our company will provide the installation dimension drawing for screw size and location of the gearbox and footing.